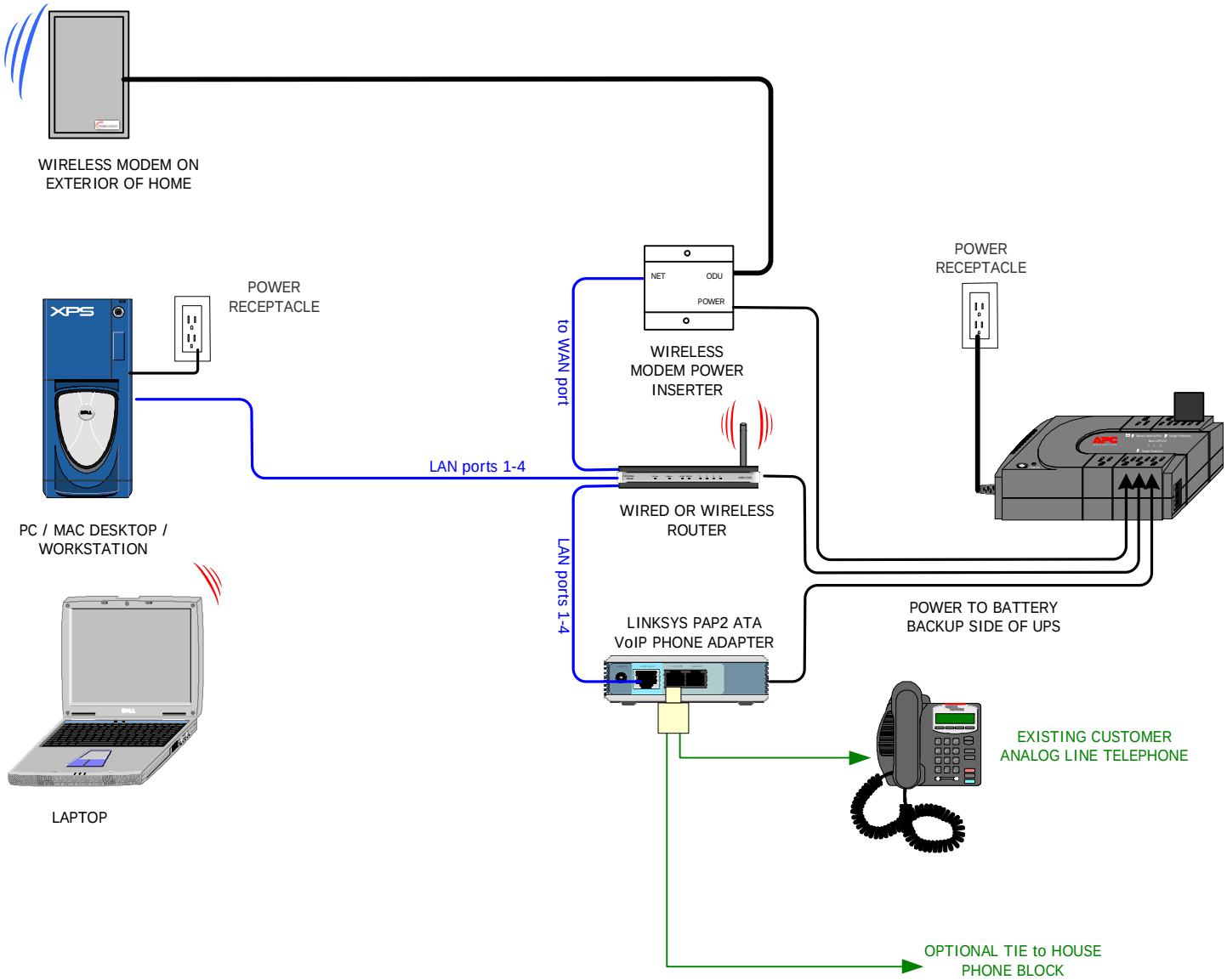

FINE PRINT:

1) Standard installation will include placement of the VoIP ATA adapter in the same location as the router. To relocate the ATA/router or to tie the VoIP service into the house phone system, additional installation charges will apply

2) This telephone service is not line powered as Telus's phone service is. During a power outage, phone service will be disrupted unless you utilize a battery backup or UPS (Un-interupted Power Supply).

3) All phone numbers issued will be Edmonton based. If Edmonton is long distance to you currently, it will no longer be once you migrate to our system. Your neighbors however, will be.

4) Customers will be assigned a new phone number, porting your existing number will incur a $165.00 fee.

5) Size the UPS accordingly for the number of devices plugging into it and run time desired (longer run time means larger battery). Minimum UPS requires to provide power for Clearwave wireless modem, router, and VoIP phone ATA

NO.	DATE:	DESCRIPTION:	BY:

REVISION, ISSUED FOR:

Clients

Seal

Project: CLEARWAVE VoIP

Title:

CLEARWAVE VoIP INSTALLATION

SCALE : NTS

DATE: JAN 2, 2007

Design By:	Approved RF by:
S.L	S.L.
Drawn By :	Approved Civil by:
S.L	
Approved By :	Revision :00

DRAWING NAME: CWVoIPINSTALL-02

TOWN	SITE NO.	DWG. NO.	SUBJ.	PAGE
			G	02